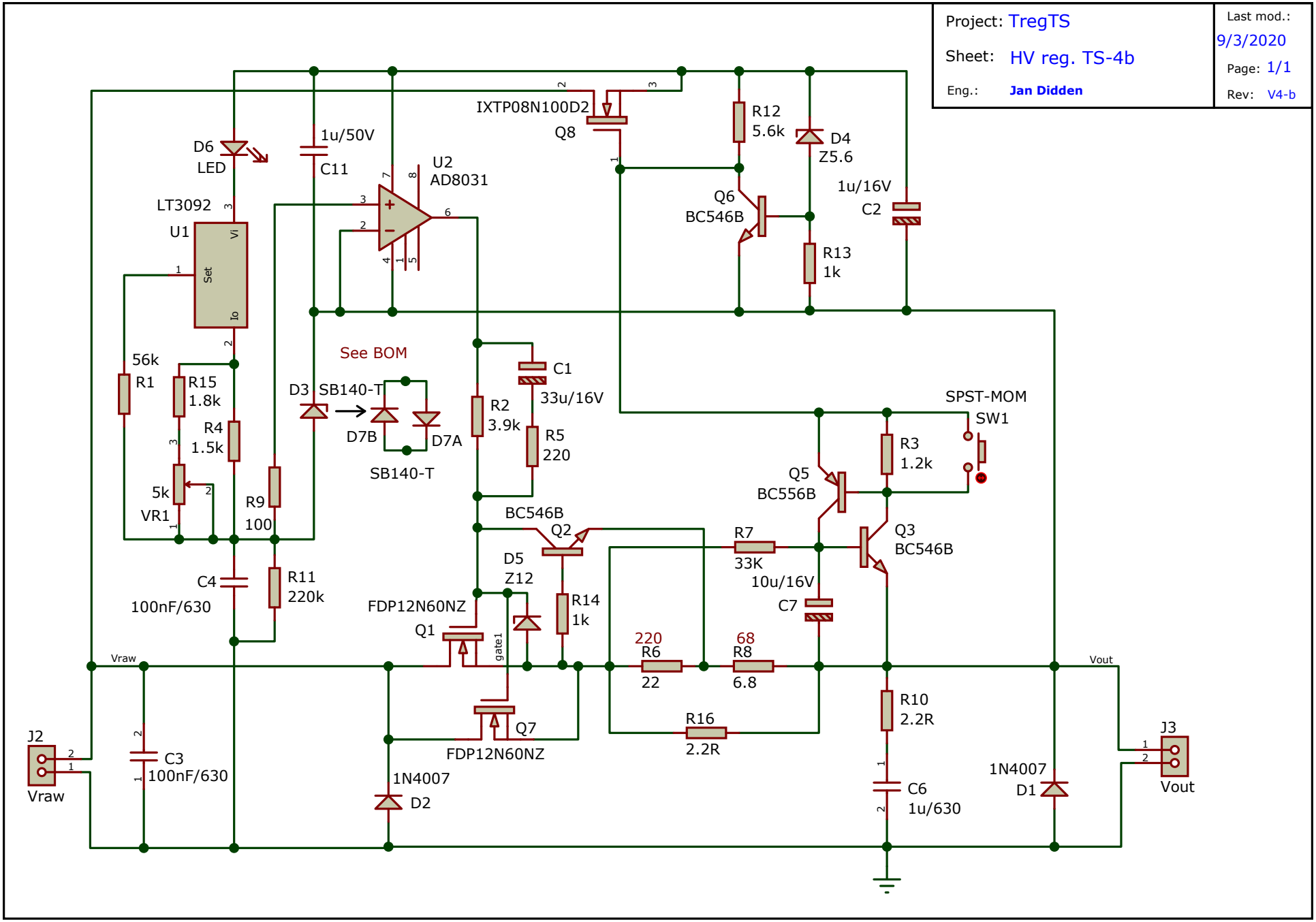
Project: TregTS
Sheet: HV reg. TS-4b
Eng.: Jan Didden
Last mod.: 9/3/2020
Page: 1/1
Rev: V4-b
IXTP08N100D2
Q8
R12
5.6k
D4
Z5.6
1u/16V
C2
Q6
BC546B
R13
1k
D6
LED
1u/50V
C11
U2
AD8031
LT3092
U1
Vi
Set
Io
56k
R1
R15
1.8k
R4
1.5k
5k
VR1
See BOM
D3
SB140-T
D7B
D7A
SB140-T
R9
100
C1
33u/16V
R2
3.9k
R5
220
SPST-MOM
SW1
R3
1.2k
Q5
BC556B
Q3
BC546B
BC546B
Q2
R7
33K
10u/16V
C7
D5
Z12
R14
1k
C4
100nF/630
R11
220k
FDP12N60NZ
Q1
gate1
220
R6
22
68
R8
6.8
R16
2.2R
R10
2.2R
C6
1u/630
Vraw
Vout
J2
Vraw
C3
100nF/630
Q7
FDP12N60NZ
1N4007
D2
1N4007
D1
J3
Vout